TAQAT AL FURAT COMPANY

For General Trading & Electrical Generators Trade

Gensets
Small Range

Perkins | LEROY SOMER

PT150 - PT165S

Ratings @ 0.8 PF		Prime Rating	Stand-by Rating
Voltage*1	Frequency*2	PT 150*3	PT 165S*4
230/400 V	50 Hz	149 KVA	163 KVA
277/480 V	60 Hz	168 KVA	186 KVA

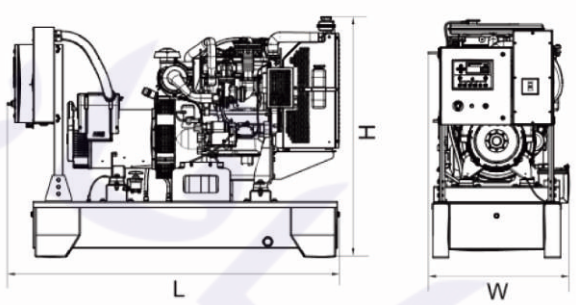

Notes

1. The applicable voltage range is 380V to 415V for 50Hz. and 380V to 480V for 60Hz applications. For other voltage consult factory.

2.This generating set is of fixed speed of 1500rpm or 1800rpm.

3. PT150 is the prime power rating of the generating set, where a variable load and unlimited hours usage are applied on the generating set with an average load factor of 80% of the prime rating over each 24 hour period. Noting that a 10% overload is available for 1 hour in every 12 hours operation.

4. PT165S is the standby power rating of the generating set, where a variable load limited to an annual usage up to 500 hours is applied, with 300 hours of which may be continuous running. Noting that no overload is permitted.

Certifications

- The complete Generating Set is type-tested according to ISO 8528-8 Standard.

- The control panel is certified by an ISO 17025 accredited laboratory to have IP55 according to IEC 60355

ISO 17025 ACCREDITED LABORATORY

Certified System Quality ISO 9001 SAI GLOBAL

Dimensions

Length	2500 mm
Width	770 mm
Height	1400 mm
Weight	1285 Kg

Technical Data

Engine model	**Perkins 1106A-70TAG2**	
Cylinders	6 - vertical in-line	
Aspiration	Turbocharged, aftercooled	
Combustion	Direct injection	
Cooling System	Water cooled	
Displacement	7.01 liters	
Oil consumption	0.1 % of fuel consumption	
Lube oil capacity	16.5 liters	
Coolant capacity	21 liters	
Governor	Mechanical	
Speed	1500 rpm	1800 rpm
Fuel Consumption @ 100% Load	33.4 L/H	38.2 L/H
Fuel Consumption @ 75% Load	24.7 L/H	29.1 L/H
Fuel Consumption @ 50% Load	16.4 L/H	19.1 L/H
Radiator Cooling Air Flow	282 m3/min	296.4 m3/min
Max exhaust gas flow	25.53 m3/min	32.29 m3/min
Emissions regulations	For unregulated territories	

The above performance data are valid as per the following specs:

- *Diesel Fuel is according to BS2869 Class A2 or equivalent.*
- *Lubricating oil is according to API CH4 (15W/40).*
- *The coolant should be 50% antifreeze and 50% distilled water.*

Alternator model	**Leroy Somer TAL044J**	
Regulation	± 1 %	
International protection	IP23	
Insulation class	H	
Terminals	6	
Frequency	50 Hz	60 Hz
Coolant Air flow	0.25 m3/s	0.30 m3/s

Taqat Al Furat Company For General Trading & Electrical Generators Trade
Iraq - Baghdad Street 62 - Opposite MG - CAR Company
E-mail : Taqat_alfurat.co@yahoo.com
07823408040 - 07733408040

PLENUM Sound Proof Canopy

Characteristics:

1. Body and components made of Galvanized Steel sheets of highest standards painted with highly anti-corrosive acrylic gloss.
2. Black zinc die-cast locks and hinges.
3. Easy access for the radiator and the control panel through the outlet and inlet attenuators.
4. Lube Oil pipe can be reached externally for easy drainage.
5. Control panel viewing window in the inlet attenuator
6. Lifting points on the base frame.
7. Exhaust silencing system in the interior of the enclosure.
8. Fuel filling and battery are secured through lockable doors.
9. Large doors for easy maintenance access.
10. Emergency stop push button mounted on the exterior of the enclosure (Optional)

Sound Pressure Levels (dBA)

Plenum Sound Proof Canopy (PL)		Sound Pressure Levels (dBA)											
		50 Hz						60 Hz					
		1 m		3 m		7 m		1 m		3 m		7 m	
Generating Set Engine model	Powertech KVA	0% Load	100% Load	0% Load	100% Load	0% Load	100% Load	0% Load	100% Load	0% Load	100% Load	0% Load	100% Load
403A-11G	9	69.7	71	66.7	68	61.7	63	71.4	72.7	68.4	69.7	63.4	64.7
403A-15G	13	69.7	71	66.7	68	61.7	63	71.4	72.7	68.4	69.7	63.4	64.7
404A-22G	20	69.7	71	66.7	68	61.7	63	71.4	72.7	68.4	69.7	63.4	64.7
1103A-33G	30	71.9	73.4	68.4	69.9	63.4	64.9	73.8	75.3	70.3	71.8	65.3	66.8
1103A-33TG1	45	70.5	72	67	68.5	62	63.5	72.4	73.9	68.9	70.4	63.9	65.4
1103A-33TG2	60	70.5	72	67	68.5	62	63.5	72.4	73.9	68.9	70.4	63.9	65.4
1104A-44TG2	80	71.7	73.2	68.2	69.7	63.2	64.4	73.5	75	70	71.5	65	66.2
1104C-44TAG2	100	73.5	75	70	71.5	65	66.2	76	77.5	72.5	74	67.5	68.7
1106A-70TG1	135	74.7	76.2	71.2	72.7	66.2	67.4	77.2	78.7	73.7	75.2	68.7	69.9
1106A-70TAG2	150	74.7	76.2	71.2	72.7	66.2	67.4	77.2	78.7	73.7	75.2	68.7	69.9
1106A-70TAG3	180	76.9	79.6	73.4	75.5	68.4	70.8	79.8	82.5	76.3	78.4	71.3	73.7
1106A-70TAG4	200	76.9	79.6	73.4	75.5	68.4	70.8	79.8	82.5	76.3	78.4	71.3	73.7
1506A-E88TAG3	250	76.9	79.6	73.4	75.5	68.4	70.8	79.8	82.5	76.3	78.4	71.3	73.7

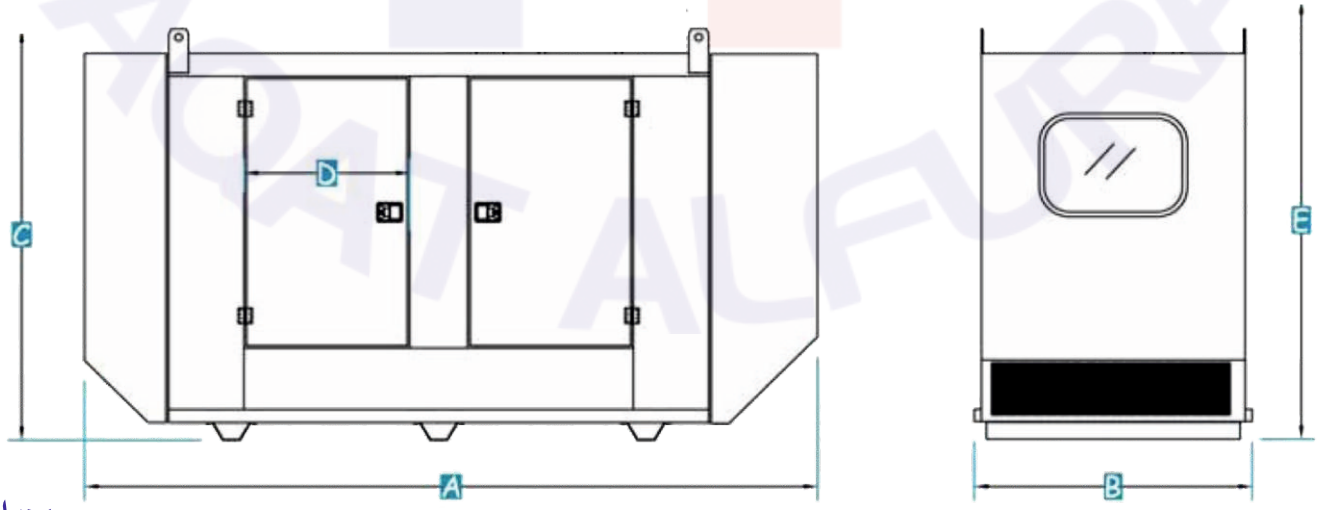

Taqat Al Furat Company For General Trading & Electrical Generators Trade
Iraq - Baghdad Street 62 - Opposite MG - CAR Company
E-mail : Taqat_alfurat.co@yahoo.com
07823408040 - 07733408040